The Brand You Trust, The Power You Depend On.

LSA 49.1 – 660 to 1010 kVA

Low Voltage Alternators - 4 Pole

- Compact & Rigid
- Industry best Efficiency
- Better motor starting capability
- High power density (Lighter weight)
- Superior thermal life

LEROY-SOMER™

Nidec
All for dreams

ELECTRICAL DATA LSA 49.1 – 4 Pole 50 HZ 1500 RPM

General Characteristics			
Insulation Class	H	**Excitation System**	AREP
Winding pitch	2/3	**AVR Model**	R 450 / D 510 C (Optional)
Terminals	6 / 12 (Optional)	**Voltage Regulation (*)**	± 0.5%
Protection	IP 23	**Sustained short-circuit current**	300 % of FLC for 10 s
Altitude	≤ 1000 m	**Total harmonic Distortion (**)**	< 4%
Over speed	120% for 2 mins	**Wave form : TIF (**)**	< 50
Air flow except L11	1 m^3/s	**Air flow L11**	1.2m^3/s

(*) Steady state duty. (**) Total harmonic content line to line, at no load or full rated linear and balanced load.

Ratings kVA @ 0.8 P.F **3 Phase 415 V, 50 Hz – 1500 RPM*****

Duty	Class/Temp. Rise	S4	M75	L10	L11
Continuous duty / 40° C	H / 125° C	660	750	890	1010
	F / 105° C	594	675	801	909
Stand-by duty / 27° C	H / 163° C	726	825	979	1111

(***) Also offering multi-voltage/60 Hz/1800 RPM

Reactance (%). Time constants (ms) - Class H / 125°C – 415 V					
Kcc	Short-circuit ratio	0.44	0.485	0.489	0.431
Xd	Direct-axis synchro reactance unsaturated	284.0	258.5	255.6	290.0
Xq	Quadrature-axis synchro reactance unsaturated	162.5	147.6	146.0	165.8
T'do	No Load Transient time constant	1958	2047	2111	2111
X'd	Direct-axis transient reactance saturated	16.3	14.1	13.6	15.4
T'd	Short-Circuit transient time constant	100	100	100	100
X"d	Direct-axis sub transient reactance saturated	13.0	11.3	10.9	12.1
T"d	Sub transient time constant	10	10	10	10
X"q	Quadrature-axis sub transient reactance saturated	15.2	12.7	11.8	13.4
Xo	Zero sequence reactance unsaturated	0.87	0.75	0.87	0.87
X2	Negative sequence reactance saturated	14.1	12.0	11.3	12.9
Ta	Armature time constant	15	15	15	15
Other data - Class H / 125°C – 415 V					
io(A)	No load excitation current	1.1	1.0	1.14	1.0
ic(A)	Full load excitation current	3.6	3.4	3.9	3.5
uc(V)	Full load excitation voltage	53	45	50	48
ms	Recovery time (ΔU = 20% trans.)	≤500	≤500	≤500	≤500

Efficiencies 415 V – 50 HZ (P.F – 0.8)

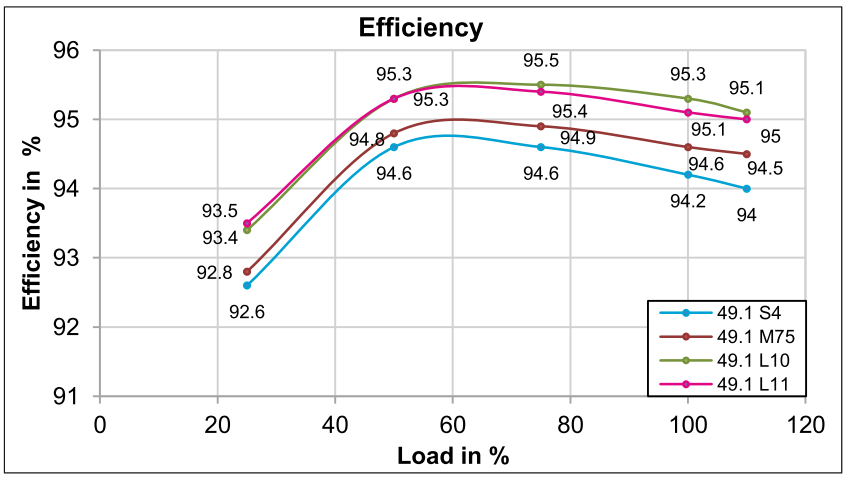

ELECTRICAL DATA — LSA 49.1 – 4 Pole — TRANSIENT VOLTAGE VARIATIONS

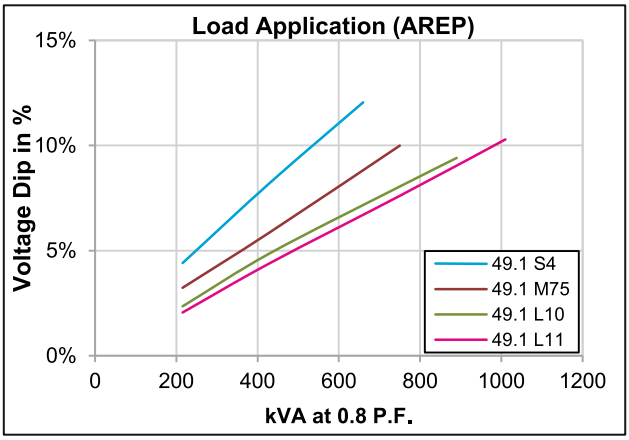

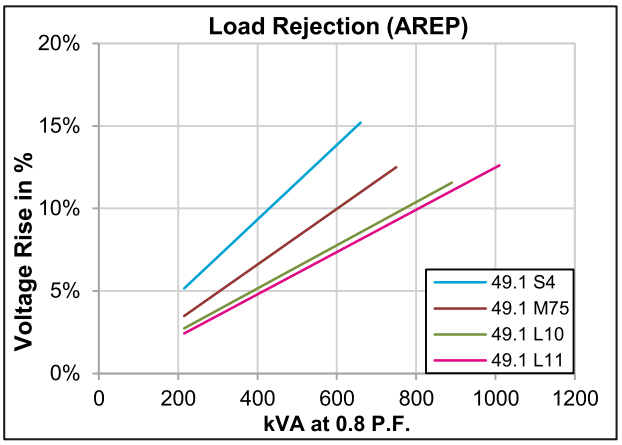

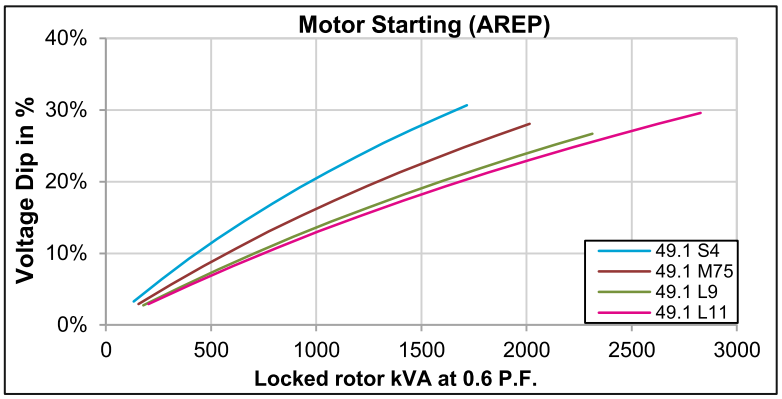

1. For a starting P.F. differing from 0.6, the starting kVA must be multiplied by (Sine φ /0.8)
2. For voltages other than 415V(Y) at 50 Hz, then kVA must be multiplied by (415/Other voltage)2

MECHANICAL DATA — DOUBLE BEARING

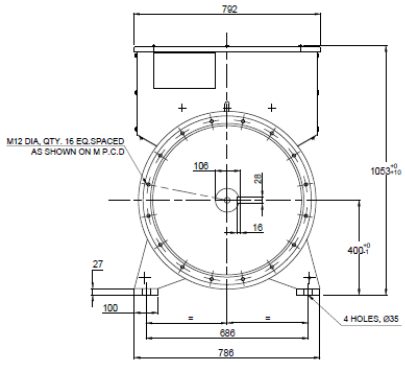

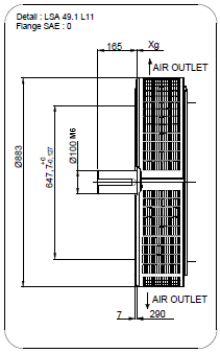

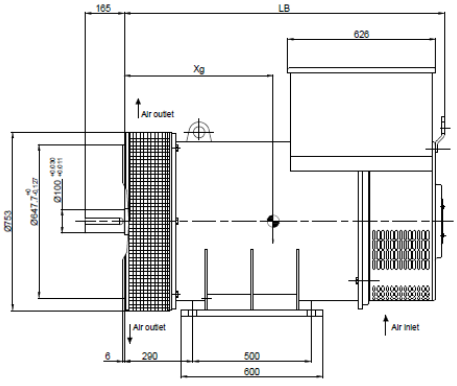

Frame Dimensions (mm) & Weight (Kg)				
Type	LB	M	Xg	Weight (Kg) Approx.
LSA 49.1 S4	1254	679.45	620	1445
LSA 49.1 M75	1354	679.45	655	1645
LSA 49.1 L10	1454	679.45	695	1845
LSA 49.1 L11	1448	679.45	670	1985
*see flange details for LSA 49.1 L11 SAE0				

MECHANICAL DATA LSA 49.1 – 4 Pole SINGLE BEARING

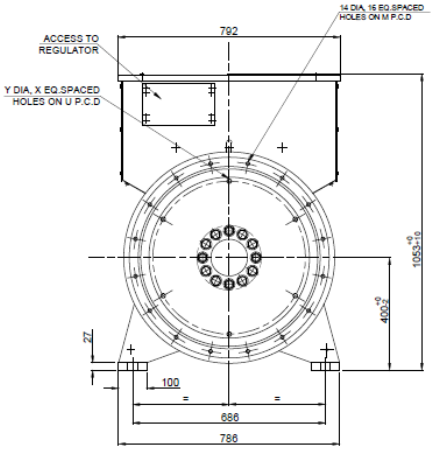

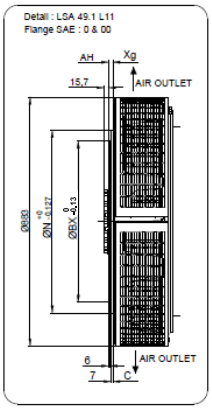

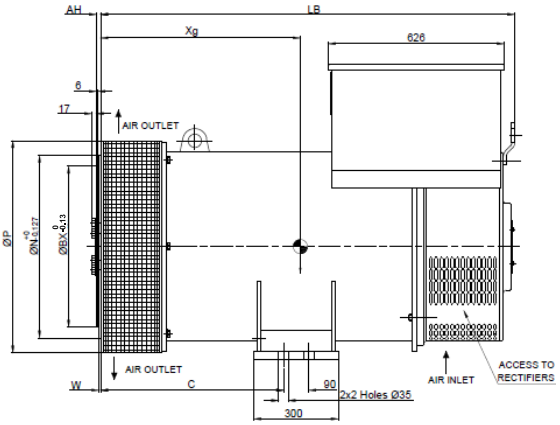

Frame Dimensions (mm) & Weight					Coupling		
Type	LB	C	Xg	Weight (Kg) Approx.	Flex Plate	14	18
LSA 49.1 S4	1272	560	635	1420	Flange S.A.E 1*	✓	X
LSA 49.1 M75	1372	650	670	1722	Flange S.A.E 1/2*	✓	X
LSA 49.1 L10	1472	650	710	1896	Flange S.A.E 0	✓	✓
LSA 49.1 L11	1448	650	686	2018	Flange S.A.E 00	X	✓

Flange (mm)					Flex Plate (mm)					
S.A.E	P	N	M	W	S.A.E	BX	U	X	Y	AH
1	753	511.175	530.225	7	14	466.7	438.15	8	14	25.4
1/2	753	584.2	619.125	6	18	571.5	542.92	6	17	15.7
0**	753	647.7	679.45	7	*: not available for LSA 49.1 L11					
00**	885	787.4	850.9	6	**: see the flange detail for LSA 49.1 L11 SAE 0 & 00.					

Torsional Analysis Data

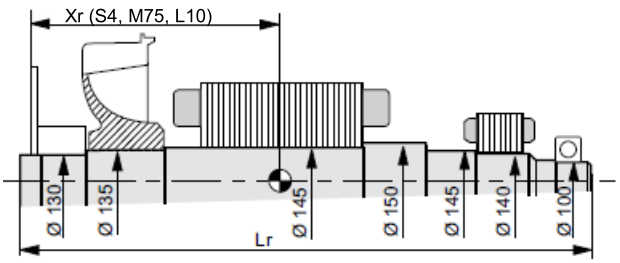

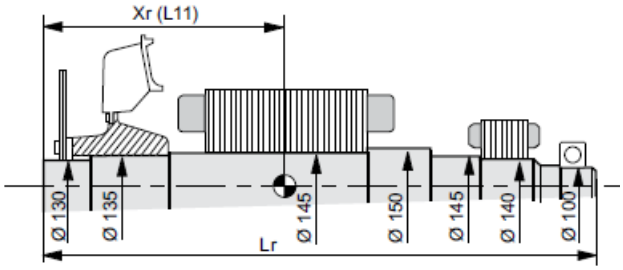

Centre of gravity: Xr (mm), Rotor length: Lr (mm), Weight: M (kg), Moment of inertia: J (kgm²): (4J = MD²)								
Type	Flex Plate S.A.E. 14				Flex Plate S.A.E. 18			
	Xr	Lr	M	J	Xr	Lr	M	J
LSA 49.1 S4	601	1280	536	8.51	591	1280	539	8.76
LSA 49.1 M75	651	1380	618	10.14	627	1380	621	10.39
LSA 49.1 L10	701	1480	700	11.78	701	1480	703	12
LSA 49.1 L11	-	-	-	-	672	1456	751	13.7

According to IS : 13364, I.E.C. 60034-1/34-2. The values indicated are typical.

© Nidec 2017. The information contained in this brochure is for guidance only and does not form part of any contract. The accuracy cannot be guaranteed as Nidec have an ongoing process of development and reserve the right to change the specification of their products without notice.

Nidec
All for dreams

Nidec Industrial Automation India Private Ltd.
#45, Nagarur, Huskur Road, Off Tumkur Road, Bengaluru - 562 162. India
T +91 80 6726 4800 | F +91 80 2371 7808
Sales Enquiry: sales.epgi@mail.nidec.com | Service Enquiry: service.epgi@mail.nidec.com