DO NOT SCALE THE DRAWING | IF IN DOUBT ASK . . . . . | ALL DIMENSIONS ARE IN mm

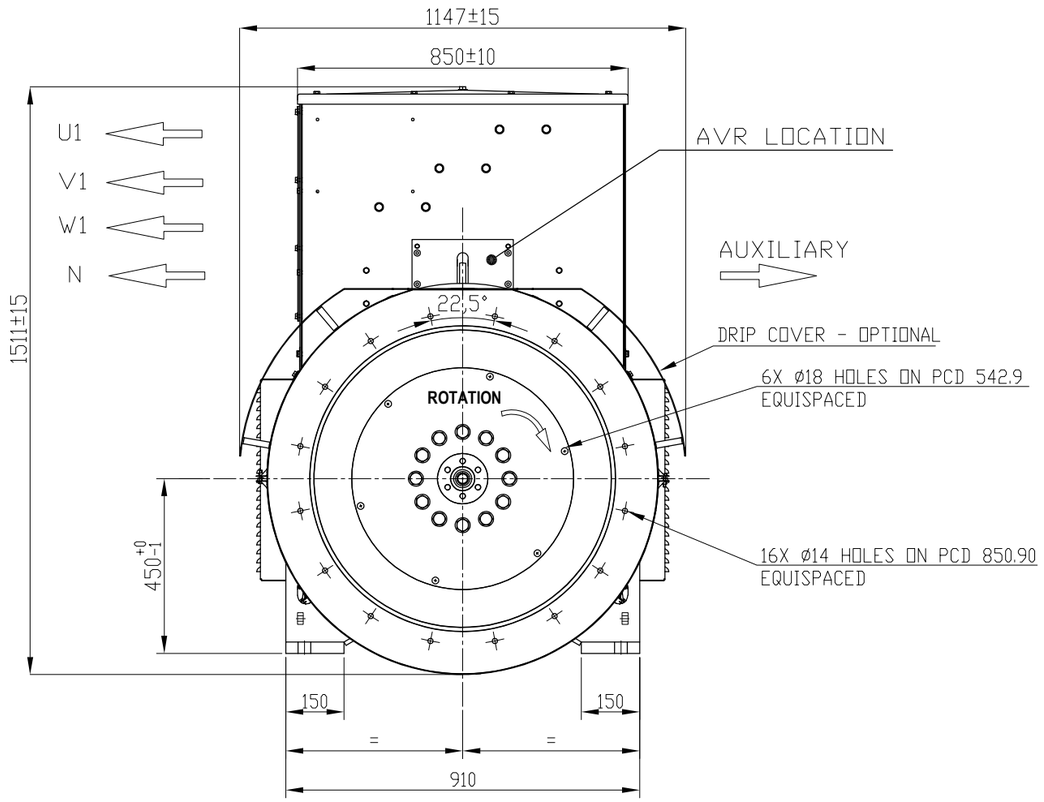

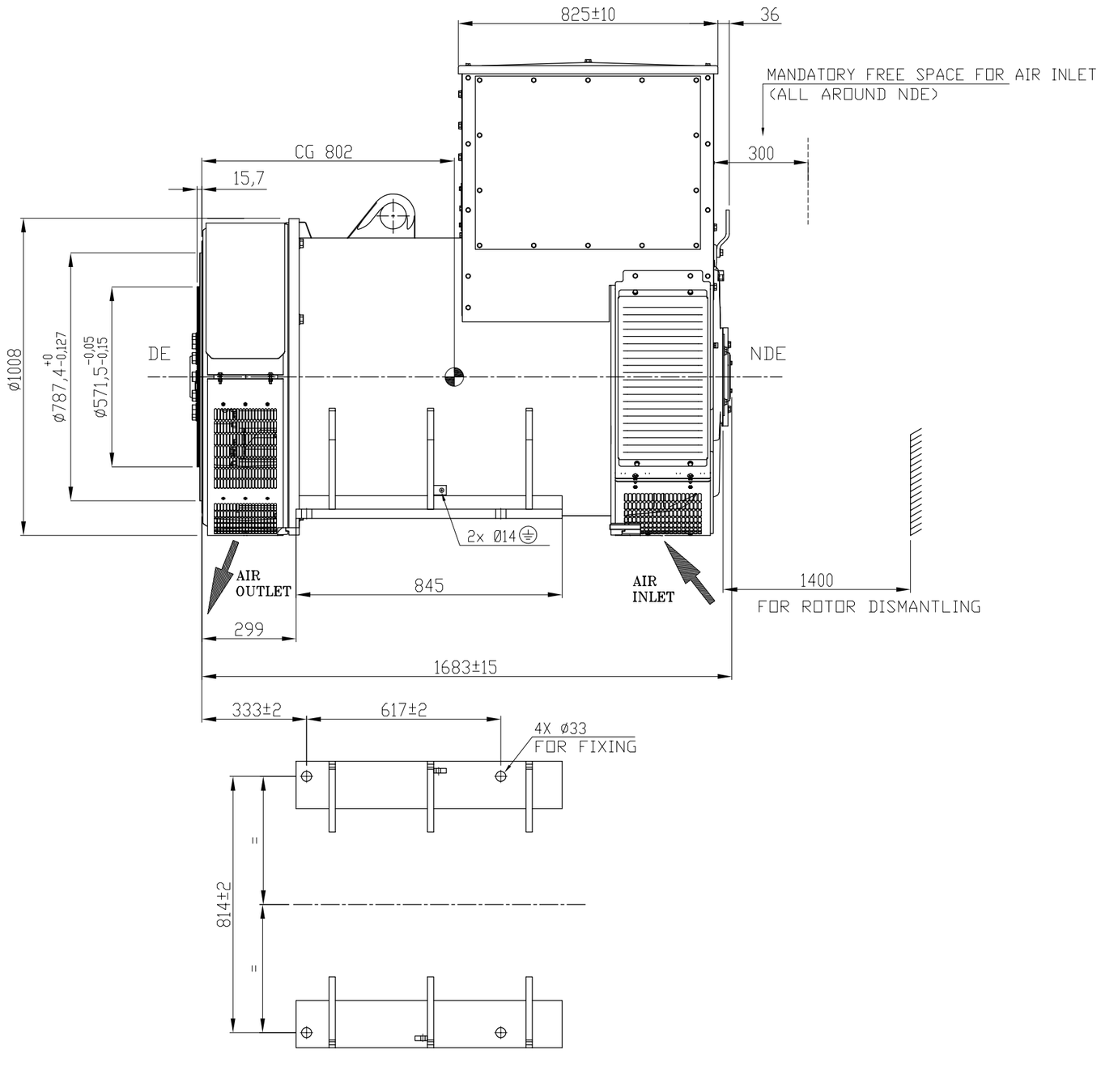

WEIGHT: ~4050 Kg

PROJECT			
———			LEROY-SOMER
USED ON	SCALE	DRAWN	CHECKED	APPROVED
LSA 52.3 S7 (SAE 00/18")	NTS	VNR	GVH	GVH
		Dt. 08/11/22	Dt. 08/11/22	Dt. 08/11/22

TITLE

DIMENSION DRAWING

DRG. No. AG322736 R00

1st RELEASE ON CT No. 22A-377

SHEET No. 01 OF 01

NIDEC INDUSTRIAL AUTOMATION INDIA PRIVATE LTD
BANGALORE-562162

ALL INFORMATION CONTAINED IN THIS DOCUMENT IS CONFIDENTIAL AND THE PROPERTY OF THE COMPANY. REPRODUCTION OF THESE IN ANY FORM IS TO BE DONE WITH PERMISSION OF THE COMPANY.

REV	ZONE	CT No.	BRIEF RECORD	SIGNATURE	DATE

NIDEC/DSG/FR/001R0